Air motor assembly exploded view

www.aerofast.com.au Aerofast Aust P/L Tel: +61 7 3299 4555 Fax: +61 7 3299 4566
lobster@aerofast.com.au for all Lobster Rivet Tools inquiries.

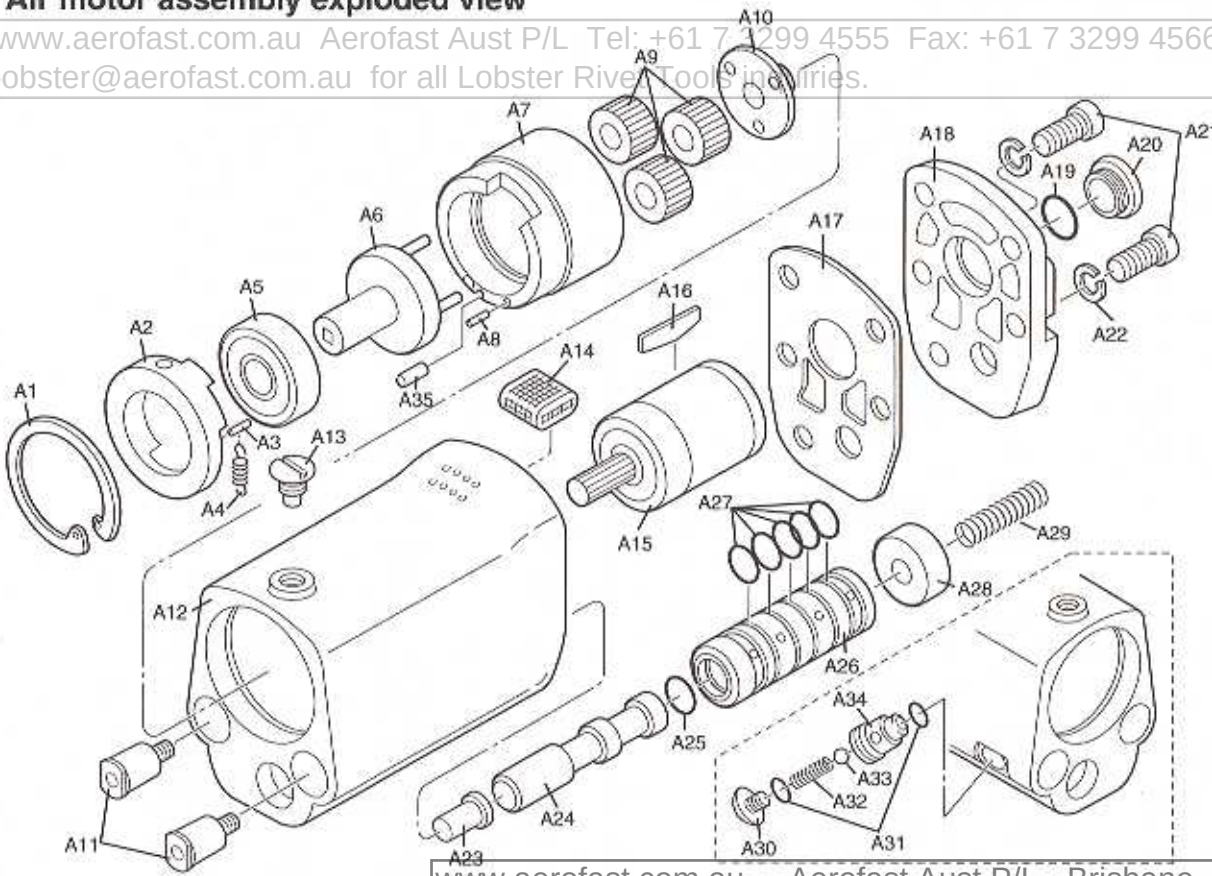

www.aerofast.com.au Aerofast Aust P/L - Brisbane
Tel: +61 7 3299 4555 Fax: +61 7 3299 4566
sales@aerofast.com.au Aerofast Aust P/L - Gold Coast
Tel: +61 7 5593 4550 Fax: +61 7 5593 4549

Air motor assembly parts table

Index No.	Code No.	Parts Name	Index No.	Code No.	Parts Name
A 1	17068	Snap Ring #34	A19	10219	O-Ring P-9
A 2	28468	Adaptor Cap	A20	16665	Motor Cap
A 3	11932	Spring Pin 2×8	A21	16863	Hex Indent Head Bolt (4×10)
A 4	28483	Clutch Returning Spring	A22	15667	Spring Washer M4 (black)
A 5	16452	Bearing 629ZZ	A23	16867	Changer Pin
A 6	16136	Gear Frame (2)	A24	28472	Spool (2)
A 7	28469	Internal Gear	A25	10274	O-Ring P-10
A 8	14438	Spring Pin ϕ2×10	A26	28473	Attachment
A 9	16733	Planetary Gear	A27	10219	O-Ring P-9
A10	16829	Gear Frame (1)	A28	28474	Spool Stopper
A11	14848	One Touch Joint	A29	16826	Spool Returning Spring
A12	28471	Motor Casing	A30	28475	Truss Head Screw
A13	29060	Setting Screw	A31	10220	O-Ring S-6
A14	16847	Muffler	A32	28481	Plunger Spring
A15	16851	Motor Set (Including 5 Vanes)	A33	28484	Urethane Ball 5/32
A16	14015	Vane (Inner Parts)	A34	28482	Plunger Case
A17	16855	Seal Packing	A35	28470	Pin 3×8
A18	16859	Cap			

AN-200A Exploded view

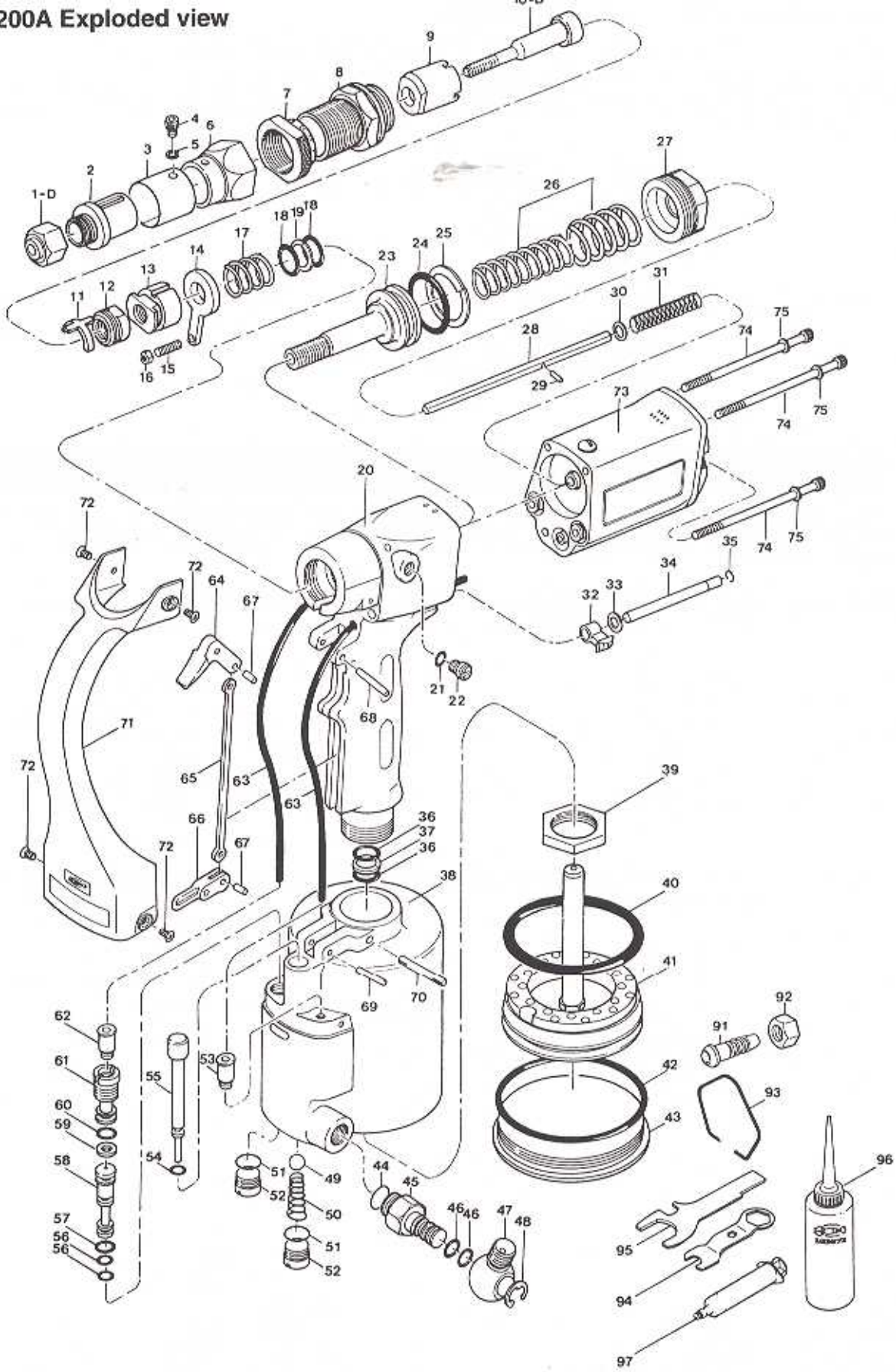

AN-200A Parts table

Index No.	Code	Parts name	Index No.	Code	Parts name
1-D*	15618	Nosepiece M6	44	10151	O-ring S-10
2	12898	Nose	45	12130	Double male connector
3	12899	Safety cover	46	10149	O-ring P-7
4	12901	Hex indent screw M4	47	10294	Rotary joint
5	15667	Spring washer M4B	48	10285	Retaining ring E-7
6	17112	Connector	49	14239	Urethane ball
7	17108	Stroke set nut	50	14255	Valve spring
8	17104	Front flange	51	14475	O-ring S-8
9	15692	Mandrel case	52	14294	End plug
10-D*	15635	Screw mandrel M6	53	14848	One touch joint
11	17100	Stop ring	54	10454	O-ring P-4
12	17096	Adaptor	55	14172	Valve pusher
13	17092	Adaptor lock nut	56	12120	O-ring P-5
14	15955	Guide	57	10149	O-ring P-7
15	15680	Guide screw	58	14513	Spool
16	15732	Guide screw nut	59	14818	Packing
17	15841	Guide spring	60	10149	O-ring P-7
18	10128	O-ring P-12	61	14767	Pilot holder
19	10129	B-ring P-12	62	14848	One touch joint
20	15837	Frame unit (with 18, 19, 36, 37)	63	15611	Urethane tube
21	12120	O-ring P-5	64	14375	Trigger
22	12135	Bleed plug	65	10202	Trigger connector rod
23	17077	Oil piston	66	10282	Trigger lever
24	12437	O-ring P-26	67	10147	Spring pin 3 × 6
25	12438	B-ring P-26	68	10251	Spring pin 3 × 20
26	16623	Return spring set	69	10145	Spring pin 3 × 18
27	17088	Frame cap	70	14154	Slotted pin 4 × 31
28	15817	Conveyor rod	71	17042	Grip cover
29	16101	Spring pin ø1.2	72	15645	C-screw M3
30	14642	Flat washer M5	73	29150	Air motor assembly
31	10133	Jaw pusher spring	74	15435	Hex indent screw M4 × 90
32	15744	Reverse switch lever	75	15667	Spring washer M4B
33	14642	Flat washer M5	91	10140	Air hose joint 1/4
34	15768	Guide pin	92	10139	Air hose joint nut 1/4
35	15800	Retaining ring E-3.2	93	15468	Hanger
36	10337	O-ring P-10A	94	10141	Spanner A
37	16030	B-ring P-10A	95	14036	Spanner B
38	15869	Air cylinder	96	10012	Hydraulic oil in a bottle
39	10112	Frame lock nut	97	14142	Priming pump
40	10134	O-ring P-60			
41	14798	Air piston unit (U)	OPTION	889	Jaw-Lube in a bottle
42	10080	O-ring G-70	OPTION	28054	Nosepiece spacer 4mm
43	15276	Air cylinder cap			

* For other thread sizes, please refer to the page 19, "Pulling Head Combination".

■ ORDERING PARTS ■

Indicate the tool model, part code number, part name and quantity as shown below when ordering.

(Example)

Model	Part Code No.	Part Name	Qty.
AN-200A	15617	Screw Mandrel M5	2

When parts are modified for improvement, the older parts are kept in stock for a period of five years.